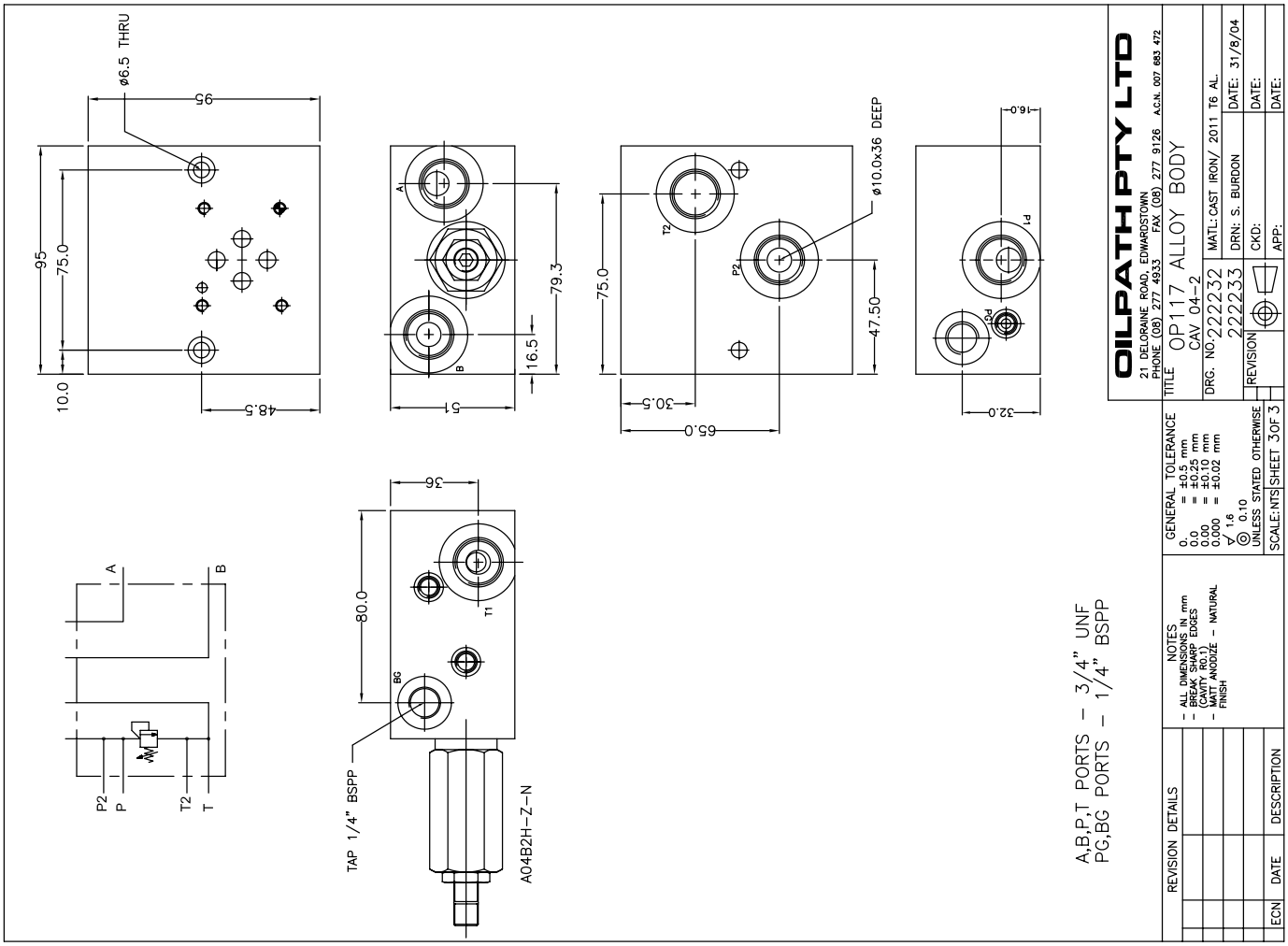
ø6.5 THRU
95
95
75.0
10.0
48.5
A
B
51
79.3
16.5
75.0
T2
P2
ø10.0x36 DEEP
47.50
30.5
65.0
16.0
P1
P2
32.0
36
80.0
T1
BG
TAP 1/4" BSPP
A04B2H-Z-N
A
B
P2
P
T2
T
A,B,P,T PORTS - 3/4" UNF
PG,BG PORTS - 1/4" BSPP
OILPATH PTY LTD
21 DELORAINE ROAD, EDWARDSTOWN
PHONE (08) 277 4933 FAX (08) 277 9126 A.C.N. 007 683 472
TITLE OP117 ALLOY BODY
CAV 04-2
DRG. NO. 222232
222233
MATL: CAST IRON/ 2011 T6 AL.
DRN: S. BURDON
DATE: 31/8/04
CKD:
DATE:
APP:
DATE:
REVISION
GENERAL TOLERANCE
0. = ±0.5 mm
0.0 = ±0.25 mm
0.00 = ±0.10 mm
0.000 = ±0.02 mm
1.6
0.10
UNLESS STATED OTHERWISE
SCALE: NTS
SHEET 3 OF 3
NOTES:
- ALL DIMENSIONS IN mm
- BREAK SHARP EDGES
(CAVITY R0.1)
- MATT ANODIZE - NATURAL FINISH
REVISION DETAILS
ECN
DATE
DESCRIPTION

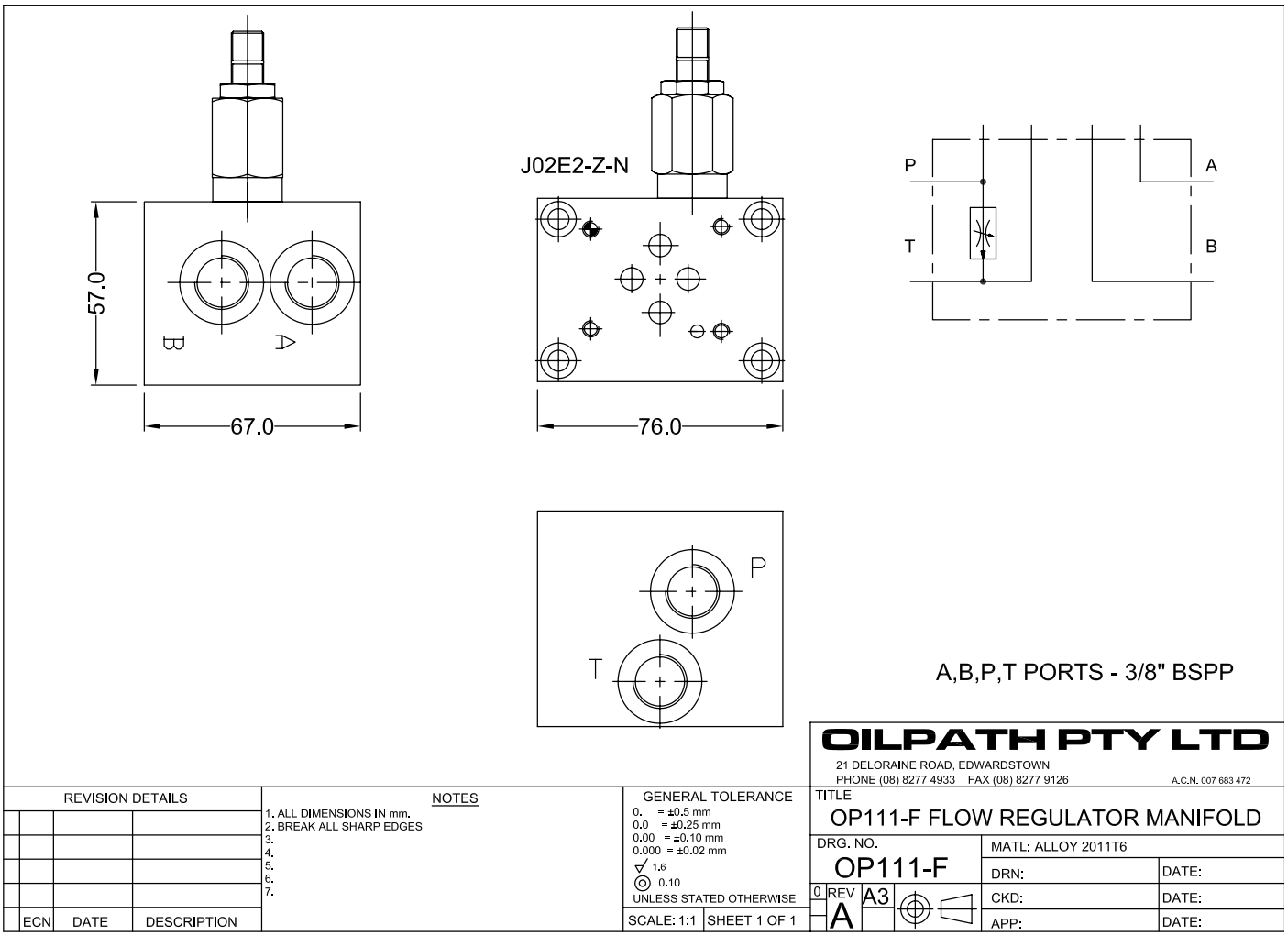
57.0
B
A
67.0
J02E2-Z-N
76.0
P
A
T
B
P
T
A,B,P,T PORTS - 3/8" BSPP
OILPATH PTY LTD
21 DELORAINE ROAD, EDWARDSTOWN
PHONE (08) 8277 4933 FAX (08) 8277 9126
A.C.N. 007 683 472
REVISION DETAILS
ECN
DATE
DESCRIPTION
NOTES
1. ALL DIMENSIONS IN mm.
2. BREAK ALL SHARP EDGES
3.
4.
5.
6.
7.
GENERAL TOLERANCE
0. = ±0.5 mm
0.0 = ±0.25 mm
0.00 = ±0.10 mm
0.000 = ±0.02 mm
1.6
0.10
UNLESS STATED OTHERWISE
SCALE: 1:1
SHEET 1 OF 1
TITLE
OP111-F FLOW REGULATOR MANIFOLD
DRG. NO.
OP111-F
REV
A
A3
MATL: ALLOY 2011T6
DRN:
DATE:
CKD:
DATE:
APP:
DATE: